Collection

MURANO

TILE PLUG

ITALIAN TILE ELEVATED SPACES

NEW YORK NATIONWIDE

1. General Product Description

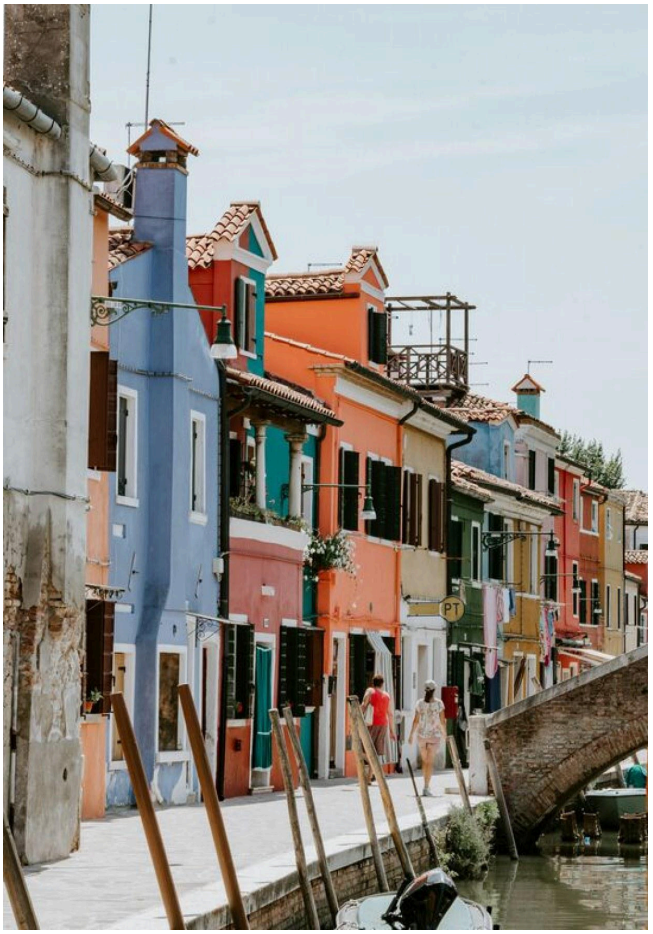

Murano is a ceramic wall tile collection from Spain, featuring a design inspired by traditional Italian craftsmanship and Mediterranean aesthetics.
The collection combines elegant glossy surfaces with distinctive linear textures, offering a versatile decorative solution for residential and commercial interiors.
Murano is characterized by its rectangular format, rich color selection, and three distinctive surface designs: smooth, fine linear relief, and wide linear relief. These variations allow the creation of architectural surfaces with different levels of texture, depth, and visual continuity.
Its contemporary appearance complements minimalist, Mediterranean-inspired, modern, and nature-inspired interiors.
The collection is designed for decorative wall applications, providing opportunities to create accent walls, backsplashes, and coordinated interior surfaces.
The compact rectangular format allows different installation arrangements, while the glossy finish enhances the appearance of the glaze and its interaction with natural and artificial light.

2.Product Versions and Surface Designs

Murano offers three distinctive ceramic surface designs, each providing a unique decorative appearance.

2.1. Smooth Surface

The smooth version features a continuous ceramic surface with a uniform glossy finish.
Its clean appearance emphasizes the natural color of the glaze and the rectangular geometry of each tile.
The reflective finish enhances the perception of brightness and creates visually continuous wall surfaces.
This design is suitable for contemporary interiors, minimalist compositions, and decorative applications where color and simplicity are the primary visual elements.
Smooth Murano tiles can be installed in horizontal, vertical, and staggered arrangements according to the project design and recommended installation practices.

2.2. Fine Linear Relief

The fine linear relief version features closely spaced parallel ridges extending across the ceramic surface.
The narrow lines create a refined texture that interacts with light to produce subtle highlights and shadows.
The relief adds visual depth while maintaining the glossy character of the collection.
Depending on the installation direction, this surface can emphasize vertical or horizontal architectural lines.
The fine linear relief is suited to accent walls and decorative applications where texture and visual rhythm are desired.

2.3. Wide Linear Relief

The wide linear relief version incorporates pronounced parallel lines with greater spacing between the raised elements.
This surface treatment creates a distinctive three-dimensional appearance and a stronger visual pattern.
The wider relief introduces depth and texture while preserving the collection's glossy finish.
This design can be used to produce decorative surfaces with a more noticeable linear character.

2.4. Linear Decorative Profile

Murano's visual presentation also includes an elongated linear element with a narrow rectangular appearance.
This component can be presented as a complementary decorative profile within the collection's design concept.
Its role is to provide visual continuity and a coordinated appearance when used alongside the ceramic wall tiles.

3. Physical and Dimensional Characteristics

Murano features a compact rectangular tile format designed for decorative wall installations.
Nominal Tile Size: 7.5 × 30 cm.
Approximate Imperial Size: 3 × 12 inches.
Nominal Thickness: 9.50 mm.
Approximate Thickness: 0.374 inches.
Surface Finish: Glossy.
Tile Shape: Rectangular.
Product Type: Ceramic wall tile.
Graphic Variations: 8 designs per model**.**
Surface Designs: Smooth, fine linear relief, and wide linear relief.

The compact format provides flexibility in decorative arrangements and allows different visual patterns to be developed.
The eight graphic variations contribute to a more natural appearance by introducing differences between individual tiles.

4. Surface Finishes and Texture Characteristics

4.1. Glossy Finish

Murano features a glossy ceramic surface that reflects light and enhances the visual appearance of the glaze. The reflective finish emphasizes the color intensity and contributes to the brightness of interior spaces.
Lighting conditions and installation orientation can influence the way the surface is perceived.
On textured designs, the glossy finish creates highlights and shadows that accentuate the relief.

4.2. Smooth Texture

The smooth finish provides a clean and uniform appearance.
Its surface emphasizes tile geometry, color consistency, and the arrangement of grout joints.
This version complements contemporary and minimalist architectural designs.

4.3. Fine Textured Relief

The fine textured relief incorporates narrow parallel lines that create subtle surface depth.
Directional lighting highlights the raised and recessed areas, producing a refined decorative effect.
The linear pattern can reinforce the vertical or horizontal character of the installation.

4.4. Wide Textured Relief

The wide textured relief incorporates more pronounced linear elements.
The greater spacing between the lines produces a stronger visual rhythm and three-dimensional surface effect.
This finish is suited to decorative compositions where texture is a key design feature.

5. Colors

MURANO BLACK 3"X12"

MURANO DEEPBLUE 3"X12"

MURANO FOREST 3"X12"

MURANO GOLD 3"X12"

MURANO GREEN 3"X12"

MURANO IVORY 3"X12"

MURANO OLIVE 3"X12"

MURANO ORANGE 3"X12"

MURANO TALCO 3"X12"

MURANO WHITE 3"X12"

AVAILABLE SIZES

MURANO JOLLY 1"X12"

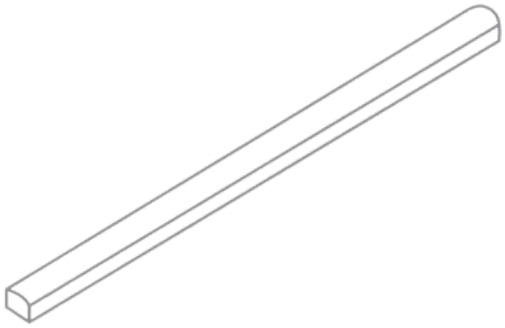

MURANO 3"X12"

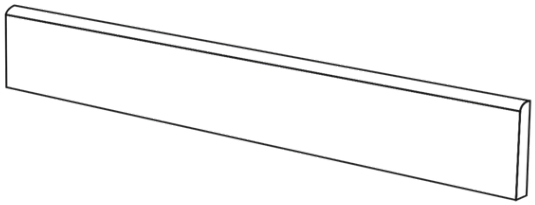

MURANO STRUCTURED 3"X12"

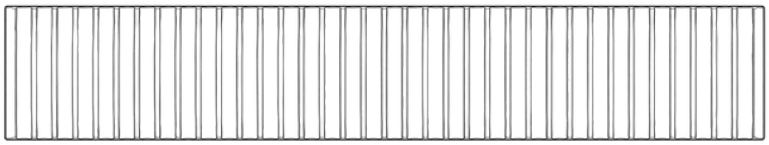

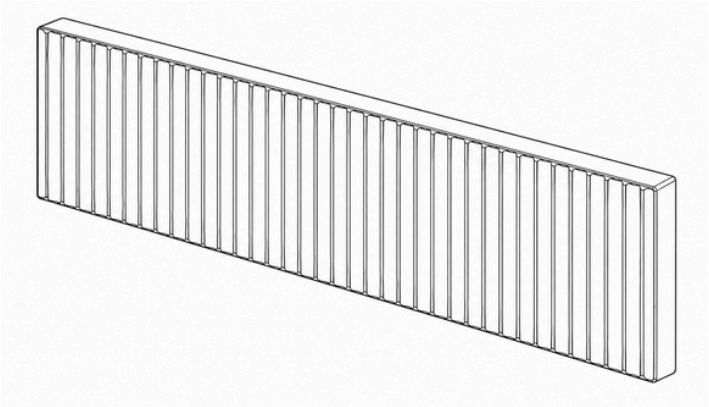

6. Product Configurations

Murano offers three documented tile surface designs in a coordinated palette of ten colors.
Smooth Surface: Black, Deepblue, Forest, Gold, Green, Ivory, Olive, Orange, Talco, and White.
Fine Linear Relief: Black, Deepblue, Forest, Gold, Green, Ivory, Olive, Orange, Talco, and White.
Wide Linear Relief: Black, Deepblue, Forest, Gold, Green, Ivory, Olive, Orange, Talco, and White.
Tile Format: 3" x 12"
Finish: Glossy**.**
Graphic *Variations:* 8 designs per model.
The variations allow different textures and colors to be combined within coordinated interior wall designs.

7. Packaging and Distribution Specifications

Murano ceramic wall tiles are supplied in standardized packaging designed for handling, transportation, and installation planning.
Pieces per Box: 26 tiles**.**
Coverage per Box: 0.59 m².
Approximate Coverage per Box: 6.35 sq. ft**.**
Weight per Box: 9 kg.
Approximate Weight per Box: 19.84 lb.
Boxes per Pallet: 120.
Coverage per Pallet: 70.8 m².
Approximate Coverage per Pallet: 762.08 sq. ft.
Declared Pallet Weight: 1,102 kg.
Approximate Pallet Weight: 2,429.5 lb.
Nominal Tile Thickness: 9.50 mm.
Graphic Variations: 8.
The packaging configuration applies to the documented smooth and relief wall tile variations.
Coverage values are based on nominal packaged quantities.
For installation planning, additional material should be considered for cutting, layout adjustments, and installation waste.

8. Product Symbols, Icons, and Abbreviations

Murano product information includes symbols and abbreviations used to identify finishes, surface textures, packaging specifications, and technical performance.

8.1. Product Identification Symbols

B — Glossy Finish: Indicates a glossy ceramic surface.
RLV — Relief: Identifies a ceramic tile with a raised or textured surface.
Rvto — Wall Covering: Identifies ceramic material intended for wall installations.
W — Wall Tile: Indicates a wall covering product.
NCS — Natural Color System: Identifies the standardized color reference.
M22 — Commercial Classification Code: A code included in the product packaging **information.**
No. of Designs: Indicates the number of graphic variations available within a model.

8.2. Packaging Abbreviations

Pz/box — Pieces per Box: Number of tiles contained in each box.
M²/box — Square Meters per Box: Nominal coverage provided by one box.
Kg/box — Kilograms per Box: Weight of one box.
Box/Pa — Boxes per Pallet: Number of boxes on one pallet.
M²/Pa — Square Meters per Pallet: Nominal coverage provided by one pallet.
Kg/Pa — Kilograms per Pallet: Declared weight of one pallet.

8.3. Technical Performance Terms

Water Absorption: Measures the amount of water absorbed by a ceramic material.
Flexural Strength: Describes the material's resistance to bending forces.
Breaking Strength: Measures the force required to fracture a ceramic tile under standardized testing conditions.
Abrasion Resistance: Evaluates the resistance of a ceramic surface or body to wear.
Thermal Shock Resistance: Describes resistance to sudden changes in temperature.
Crazing Resistance: Indicates resistance to the formation of fine cracks in the glazed surface.
Frost Resistance: Evaluates the behavior of ceramic materials under freezing and thawing conditions.
Chemical Resistance: Describes resistance to specified chemical agents.
Stain Resistance: Evaluates the resistance of a ceramic surface to staining substances.
Slip Resistance: Evaluates surface performance in relation to slipping hazards.

9. Ceramic Material Technical Specifications

The collection's technical reference information includes performance specifications for glazed porcelain, colored-body porcelain, white-body ceramic wall tile, and red-body ceramic wall tile.
The specifications are organized by ceramic material classification and provide reference values for mechanical, chemical, and thermal performance.
These values describe the corresponding material categories and should be applied to an individual Murano product only when its ceramic body classification matches.

White-Body Wall Tile

Water Absorption: Greater than 10%.
Flexural Strength Requirement: Greater than 15 N/mm^2.
Breaking Strength Requirement: Greater than 600 N.
Surface Abrasion Resistance: Not applicable.
Linear Thermal Expansion: Less than 7.0×10^{-6} °C^{-1}.
Thermal Shock Resistance: Resistant.
Crazing Resistance: Resistant.
Chemical Resistance: Complies with applicable requirements.
Resistance to Cleaning Products and Swimming Pool Chemicals: Class GA.
Stain Resistance: Complies with applicable requirements.

Red-Body Wall Tile

Water Absorption: Between 10% and 20%.
Flexural Strength Requirement: Greater than 12 N/mm^2.
Breaking Strength Requirement: Greater than 600 N.
Surface Abrasion Resistance: Not applicable.
Linear Thermal Expansion: Less than 7.0×10^{-6} °C^{-1}.
Thermal Shock Resistance: Resistant.
Crazing Resistance: Resistant.
Chemical Resistance: Complies with applicable requirements.
Resistance to Cleaning Products and Swimming Pool Chemicals: Class GA.
Stain Resistance: Complies with applicable requirements.

10. Technical Testing Standards

The technical specifications reference recognized ceramic testing standards for dimensional characteristics, mechanical performance, water absorption, thermal properties, and chemical resistance.

ISO 10545-2 — Dimensional Characteristics: Evaluates ceramic tile dimensions and dimensional accuracy.
ISO 10545-3 — Water Absorption: Determines the amount of water absorbed by a ceramic material.
ISO 10545-4 — Flexural and Breaking Strength: Measures resistance to bending and fracture.
ISO 10545-6 — Deep Abrasion Resistance: Evaluates resistance to deep material wear.
ISO 10545-7 — Surface Abrasion Resistance: Evaluates resistance to surface wear.
ISO 10545-8 — Linear Thermal Expansion: Measures dimensional changes associated with temperature.
ISO 10545-9 — Thermal Shock Resistance: Evaluates resistance to rapid temperature changes.
ISO 10545-11 — Crazing Resistance: Evaluates resistance to fine cracking in glazed surfaces.
ISO 10545-12 — Frost Resistance: Evaluates performance under freezing and thawing conditions.
ISO 10545-13 — Chemical Resistance: Evaluates resistance to chemical agents.
ISO 10545-14 — Stain Resistance: Evaluates resistance to staining substances.
DIN 51130 — Slip Resistance: A testing method associated with slip resistance classification.
UNE-ENV 12633 — Slip Resistance: A testing method associated with slip resistance.
ASTM C1028 — Slip Resistance: A testing method referenced for slip resistance.
EN 14411 — Ceramic Tile Requirements: Provides technical classifications and requirements for ceramic tiles.
The relevant test methods depend on the ceramic material category and intended application.

11. Recommended Applications

Murano is designed for decorative wall installations in residential and commercial interiors.
Its colors, glossy surface, and linear relief variations provide opportunities for different architectural compositions.

11.1. Bathroom Walls

Murano can be incorporated into bathroom wall designs, including decorative surfaces and areas surrounding washbasins.
Light colors such as White, Ivory, and Talco contribute to bright interior compositions.
Darker colors such as Deepblue, Forest, and Olive create contrasting decorative effects.
Smooth finishes emphasize visual continuity, while relief surfaces introduce texture and depth.
Wall installations exposed to direct water require appropriate waterproofing and compatible installation systems.

11.2. Kitchen Walls

Murano can be used as a decorative kitchen wall covering or backsplash.
The collection's glossy surfaces and linear textures complement contemporary cabinetry, wood finishes, and stone-like materials.
Areas exposed to grease, moisture, and food-related residues should be maintained with compatible cleaning products.

11.3. Commercial and Decorative Interiors

Murano provides a decorative wall covering option for architectural and interior design projects.
Its variety of colors and textures allows the creation of distinctive accent surfaces and coordinated wall compositions.
The selection of installation patterns and orientations influences the overall visual effect.

11.4. Architectural Design Flexibility

Murano's rectangular format allows horizontal, vertical, and staggered compositions.
The different relief patterns can be used to emphasize direction, texture, and visual rhythm.
The combination of smooth and textured tiles supports coordinated decorative arrangements.

12. Installation Recommendations

Correct installation is essential for the appearance and long-term performance of ceramic wall coverings.

12.1. Professional Installation

Murano should be installed by qualified professionals using appropriate tools and materials.
The installation process should account for the characteristics of the ceramic tile, substrate conditions, adhesives, grout, and surrounding environment.

12.2. Surface Preparation

The substrate must be rigid, flat, clean, and suitable for ceramic installation.
The surface must also meet the required waterproofing conditions and be chemically compatible with the bonding materials.
Surface irregularities and contaminants should be corrected before installation.

12.3. Installation Over Existing Ceramic Tile

When Murano is installed over an existing ceramic surface, appropriate bonding measures must be used to ensure proper adhesion.
The adhesive system must be compatible with the existing surface.

12.4. Structural and Movement Joints

Existing structural joints must be respected.
Movement and perimeter joints should be incorporated according to project conditions and applicable requirements.
These joints help accommodate movement and reduce the risk of damage to the ceramic covering.

12.5. Adhesives and Grout

Adhesive products must be compatible with the ceramic body and installation conditions.
Low-absorption ceramic materials require appropriate bonding systems.
Grout and adhesive materials should provide suitable mechanical, chemical, and elastic properties.

12.6. Staggered Installation Patterns

General ceramic installation guidance recommends avoiding staggered layouts with offsets greater than 15 cm.
The offset should not exceed 25% of the tile length.
Installation patterns should be evaluated in relation to tile dimensions, dimensional tolerances, and project conditions.

13. Cleaning and Maintenance

Murano ceramic surfaces require regular cleaning practices to preserve their glossy appearance and decorative characteristics.

13.1. Post-Installation Cleaning

After grouting and the removal of excess installation material, adequate curing and drying time must be allowed.
A waiting period of approximately five days is recommended before performing final post-installation cleaning.
The curing requirements of the selected adhesives and grout should also be respected.

13.2. Protection During Curing

Newly installed surfaces should be protected against water and excessive moisture during the initial curing period.
Protection against accidental impacts and construction-related contamination is also recommended.

13.3. Routine Cleaning

Routine cleaning can be performed using clean water.
A compatible alkaline-based detergent may be used when necessary.
Cleaning frequency should be determined according to the degree of surface contamination.
Textured tiles may require additional attention along their relief lines.

13.4. Cleaning Products to Avoid

Abrasive cleaning products should be avoided.
Hydrofluoric acid must not be used because it can damage the glazed ceramic surface.
Metal scrapers and abrasive pads are not recommended.
Waxes, oils, and similar surface treatments should also be avoided.

13.5. Removal of Persistent Stains

Persistent stains should be treated using cleaning products compatible with the chemical resistance of the ceramic surface.
When conventional detergents are insufficient, specialized products should be selected according to the material's chemical resistance characteristics.

13.6. Decorative Components

Decorative components containing metal should be cleaned using a damp cloth and neutral liquid soap.

Protective films, when supplied, should remain in place until installation and initial cleaning have been completed.

14. Storage and Handling

Murano ceramic tiles should remain in their original packaging until installation.
Original packaging helps protect the glazed surfaces and tile edges during storage and transportation.
The material should be protected from direct exposure to rain and sunlight.
Damaged packaging may increase the risk of breakage, chipped edges, and surface staining.
For extended storage periods, the material should be kept in a covered and protected location.
Careful handling helps reduce material losses and preserve the condition of the tiles before installation.

15. Additional Product Information

15.1. Ceramic Material Categories

Murano's general technical reference information includes glazed porcelain, colored-body porcelain, white-body wall tile, and red-body wall tile classifications.
Glazed Porcelain: Group BIa (GL), with water absorption below 0.5% and a declared average value of 0.1%.
Colored-Body Porcelain: Group BIa, with water absorption below 0.5% and a declared average value of 0.1%.
White-Body Wall Tile: Ceramic wall covering category with water absorption greater than 10%.
Red-Body Wall Tile: Ceramic wall covering category with water absorption between 10% and 20%.
The applicable technical values depend on the ceramic body used for the specific product.

15.2. Wall Tile Classification

Product Type: Decorative ceramic wall tile.
Nominal Format: 7.5 × 30 cm.
Finish: Glossy.
Nominal Thickness: 9.50 mm.
Graphic Variations: 8 designs.
Murano is presented as a wall covering collection for decorative vertical applications.

15.3. Abrasion Resistance

Surface abrasion resistance is evaluated under **ISO 10545-7** for applicable ceramic classifications.
Deep abrasion resistance is evaluated under **ISO 10545-6** for applicable ceramic materials.
Colored-Body Porcelain Deep Abrasion Reference: 110–130 mm^3.
For white-body and red-body wall tile categories, surface abrasion resistance is listed as not applicable.

15.4. Slip Resistance

The technical references include **DIN 51130, UNE-ENV 12633**, and **ASTM C1028.**
Slip resistance classifications depend on the ceramic model and applicable testing method.

15.5. Thermal Performance

Linear Thermal Expansion Reference: Less than 7.0×10^{-6} °C^{-1}.
Thermal Shock Resistance: Resistant in the documented general ceramic categories.
Frost Resistance: Resistant in the documented porcelain categories.
These properties are evaluated according to the applicable material classification.

15.6. Chemical and Stain Resistance

Chemical Resistance Test: ISO 10545-13.
Stain Resistance Test: ISO 10545-14.
Glazed Porcelain: Class GA for cleaning products and swimming pool chemicals.
Colored-Body Porcelain: Class UA for cleaning products and swimming pool chemicals.
White-Body Wall Tile: Class GA for cleaning products and swimming pool chemicals.
Red-Body Wall Tile: Class GA for cleaning products and swimming pool chemicals.
Stain Resistance: Compliance with applicable requirements is indicated for the general ceramic categories.

15.7. Display and Merchandising Information

The product documentation includes display panel references for presenting the collection.
Display Panel Size: 1,924 × 1,005 mm.
Approximate Imperial Size: 75.75 × 39.57 inches.
Display Reference: TU2P1862.
Additional Display Reference: TU2P2072.
These references correspond to presentation materials rather than individual tile ordering codes.

16. General Product Summary

Murano is a ceramic wall tile collection from Spain, featuring a design inspired by Italian craftsmanship and Mediterranean aesthetics.
The collection combines a glossy finish with three distinctive ceramic surface designs: smooth, fine linear relief, and wide linear relief.
The tiles are offered in a nominal **7.5 × 30 cm** format with a thickness of 9.50 mm and eight graphic variations per model.
Murano includes ten colors: **Black, Deepblue, Forest, Gold, Green, Ivory, Olive, Orange, Talco, and White.**
The combination of colors and surface textures allows a range of decorative compositions for residential and commercial interiors.
Each box contains 26 tiles, covering approximately **6.35** square feet. The standard pallet configuration contains 120 boxes, representing approximately **762.08** square feet of nominal coverage.
The collection's technical reference information addresses ceramic body classifications, water absorption, mechanical strength, abrasion, thermal behavior, chemical resistance, and stain resistance.
The appropriate technical performance values depend on the specific ceramic material classification.
Murano is intended primarily for decorative wall installations. Proper substrate preparation, compatible installation materials, movement joints, and professional workmanship contribute to successful installation.
Routine maintenance consists of non-abrasive cleaning using products compatible with the glazed ceramic surface.
Murano combines contemporary design versatility, a coordinated color palette, and distinctive surface textures to create decorative wall finishes for modern interior environments.

TILE PLUG
ITALIAN TILE ELEVATED SPACES
NEW YORK NATIONWIDE